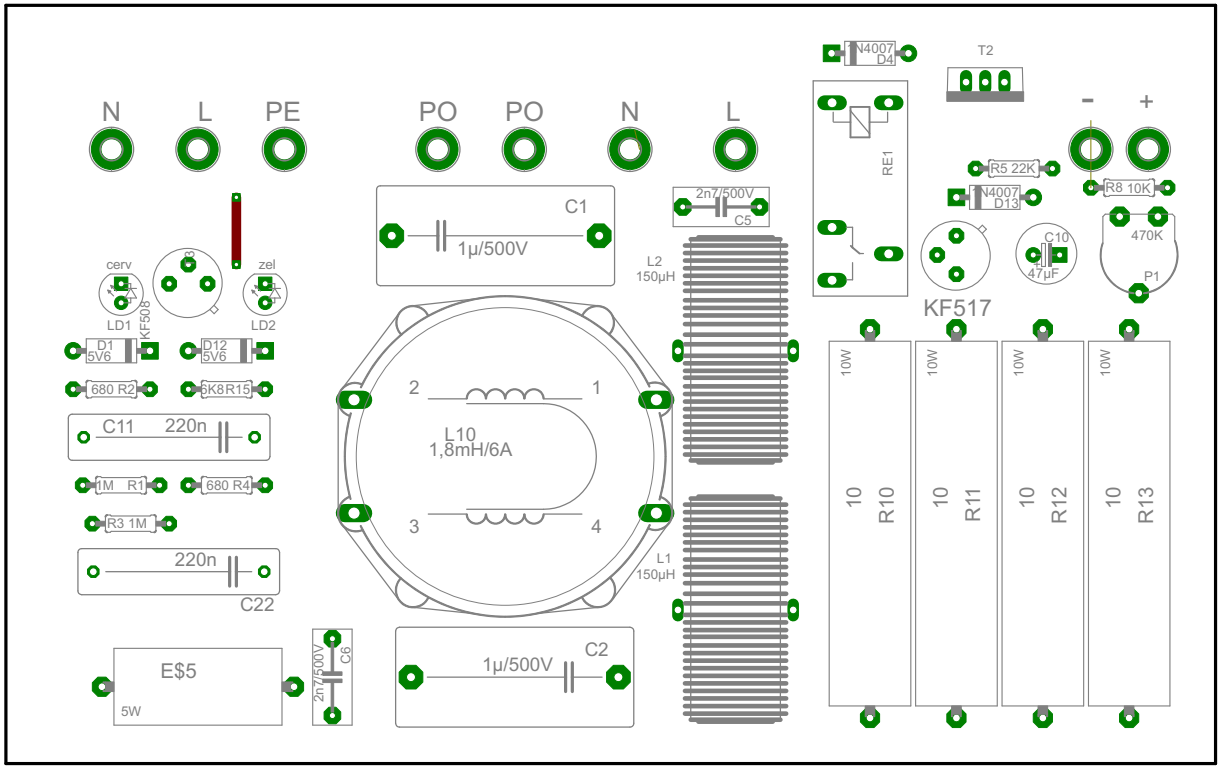
N
L
PE
PO
PO
N
L
C1
1µ/500V
2n7/500V
C5
L2
150µH
L1
150µH
L10
1,8mH/6A
2
1
3
4
cerv
zel
LD1
LD2
KF506
D1
5V6
D12
5V6
680 R2
6K8 R15
C11
220n
1M R1
680 R4
R3 1M
220n
C22
E$5
5W
2n7/500V
C6
1µ/500V
C2
N4007
D4
T2
RE1
R5 22K
N4007
D13
R8 10K
470K
P1
C10
47µF
KF517
10W
10
R10
10
R11
10
R12
10
R13